PHILIPS

hue

Lucca
Pedestal
Post

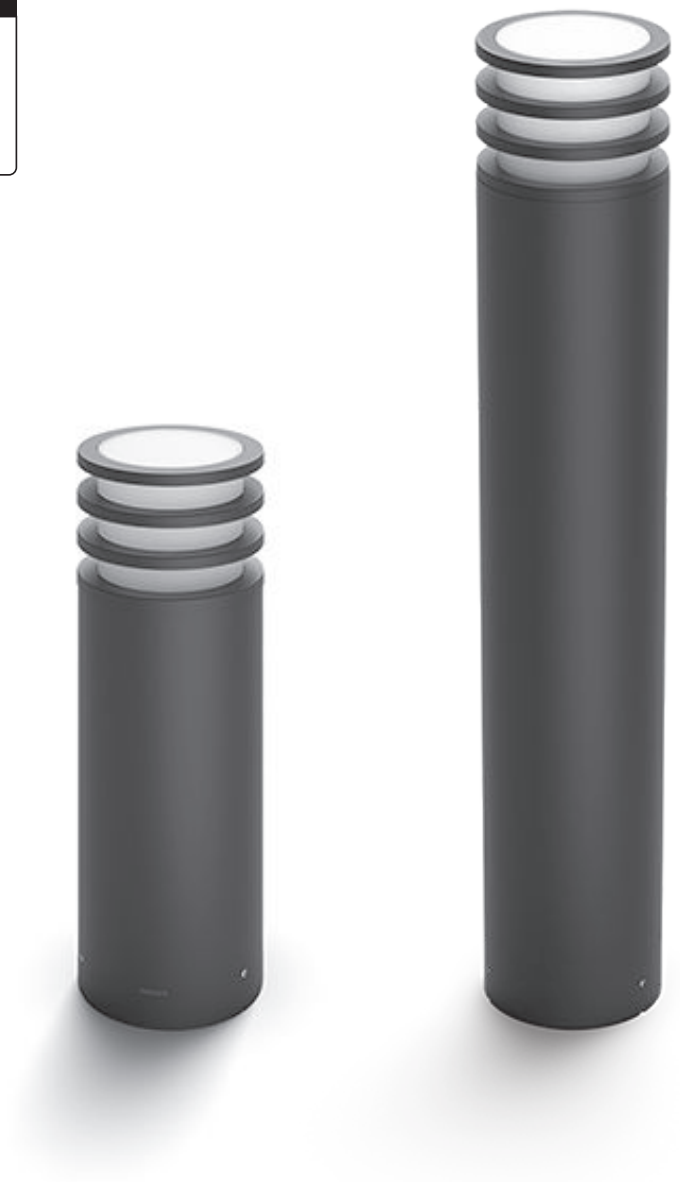

iA

User manual
Benutzerhandbuch
Notice d’emploi
Manual de usuario
Manual do usuário
Manuale d'uso

Incl.

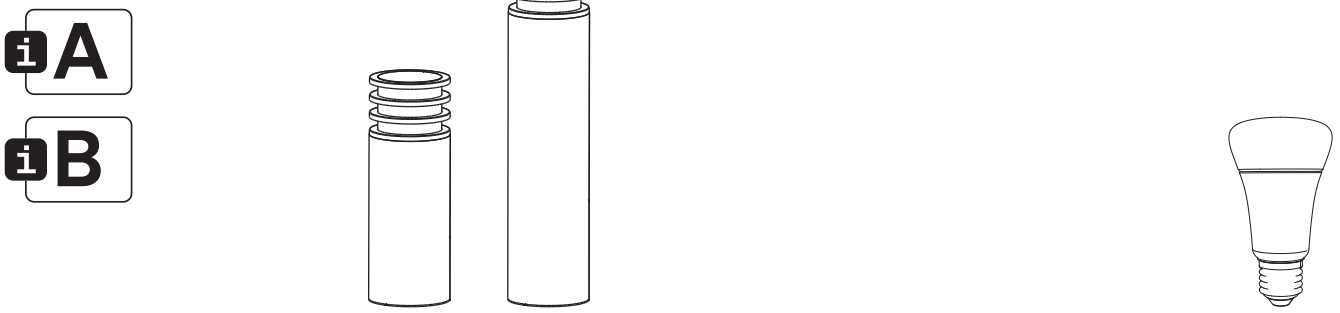

Excl.

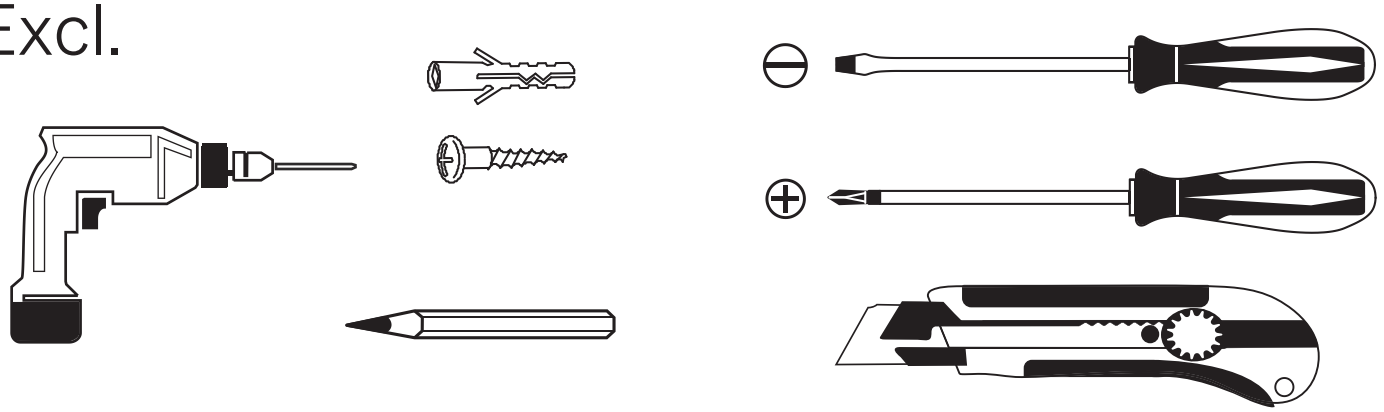

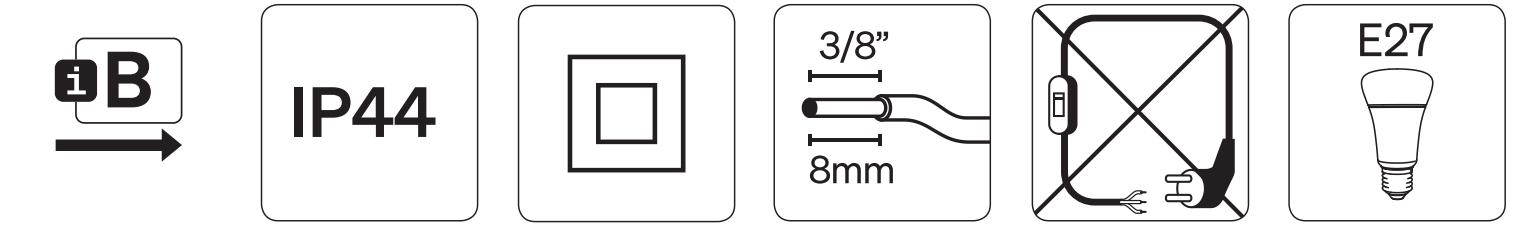

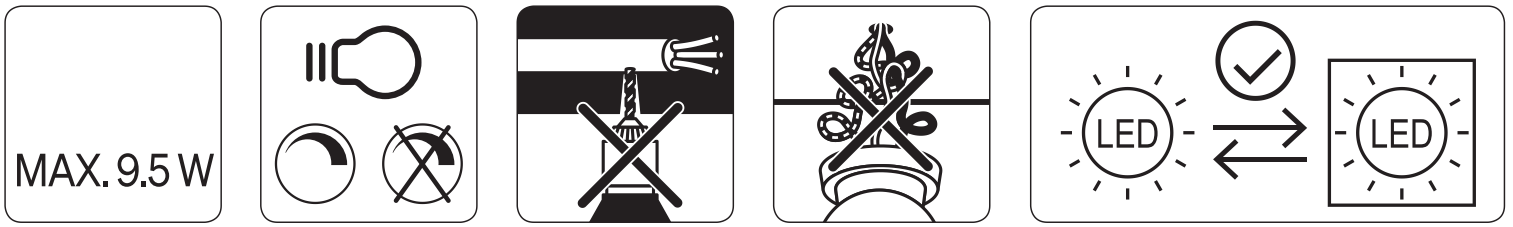

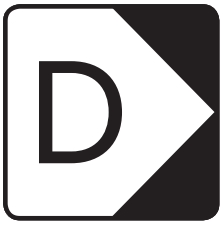

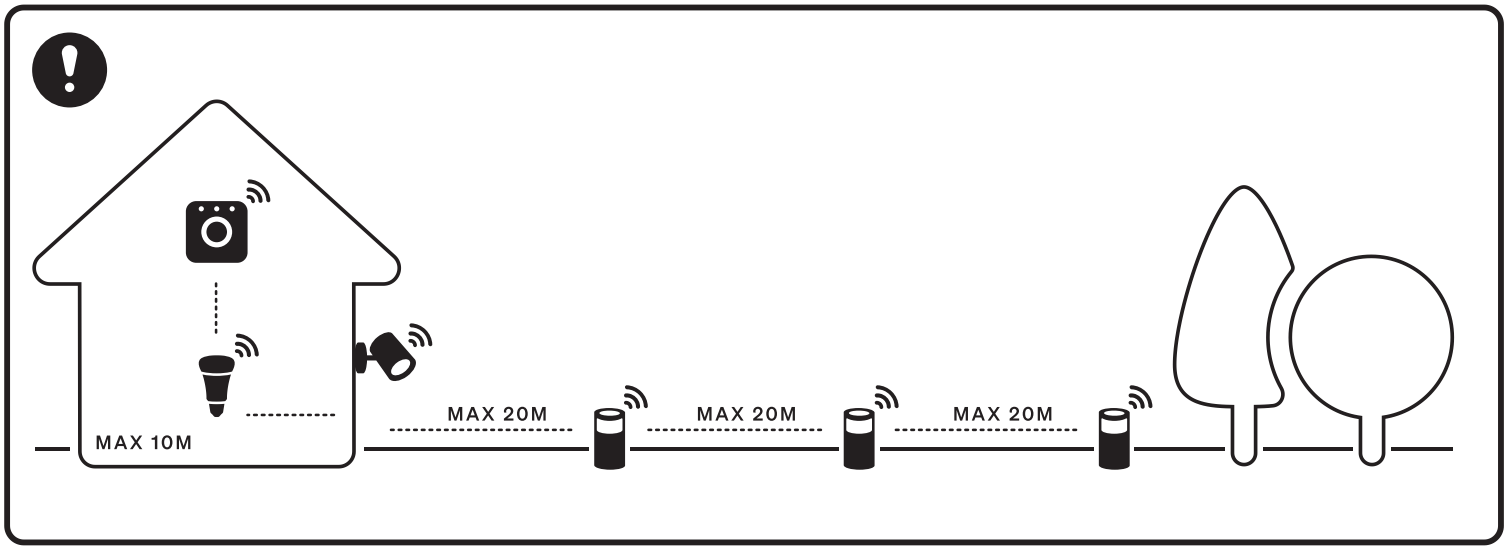
MAX 10M
MAX 20M
MAX 20M
MAX 20M

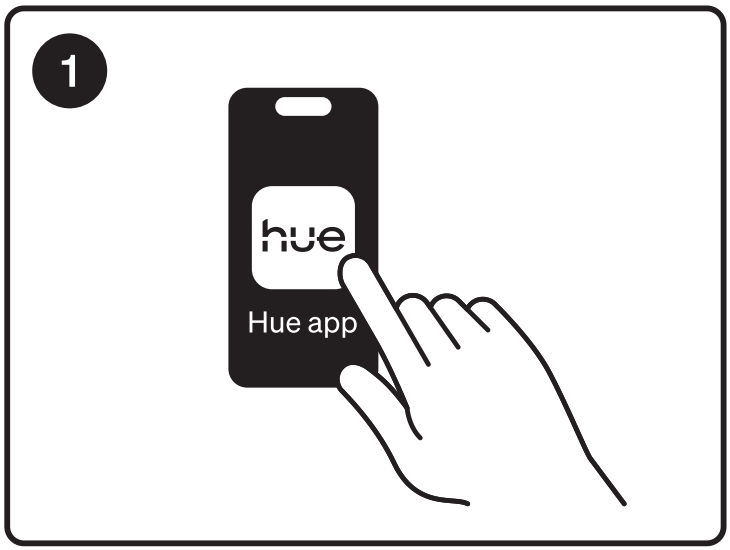
1
hue
Hue app

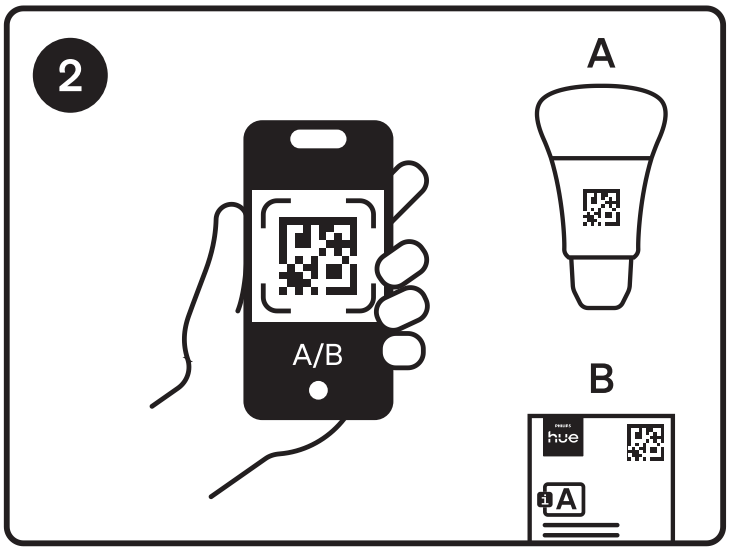
2
A/B
A
B
hue
A

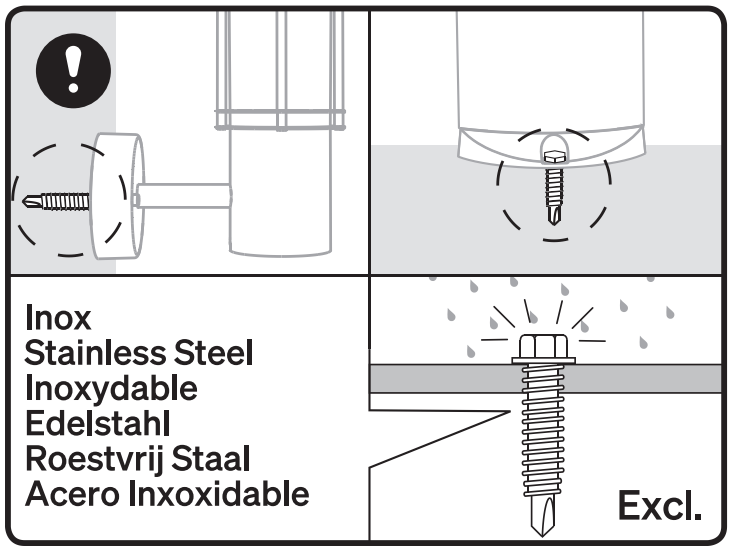
Inox
Stainless Steel
Inoxydable
Edelstahl
Roestvrij Staal
Acero Inxoxidable
Excl.

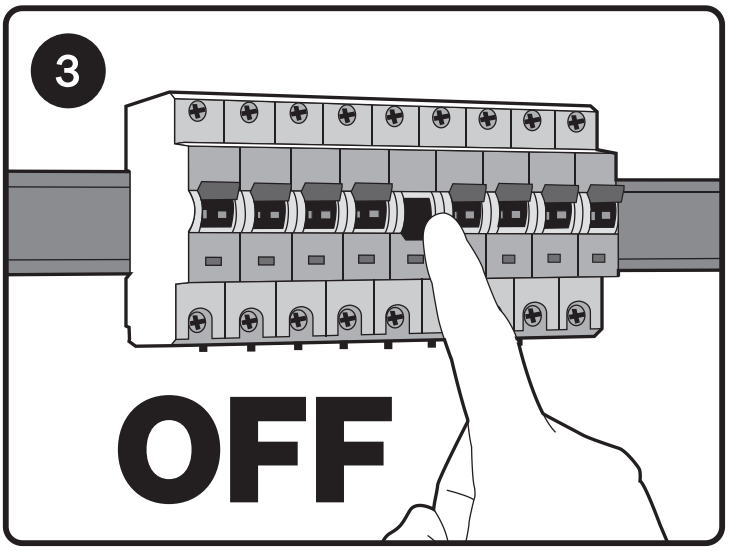
3
OFF

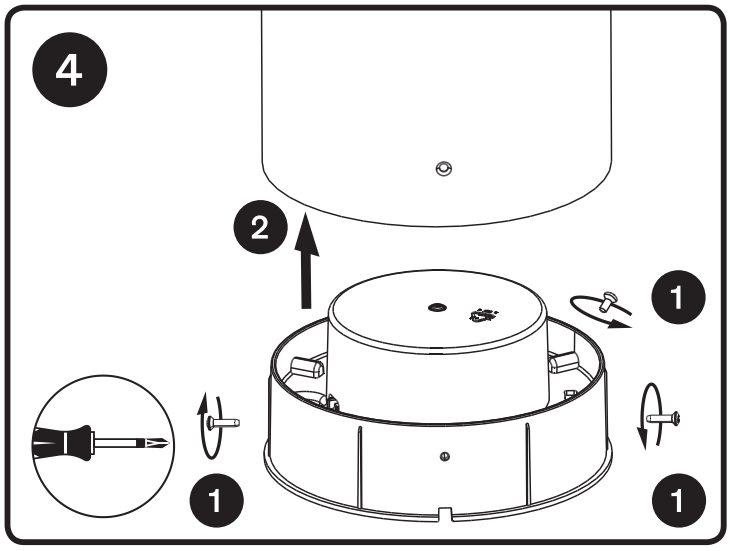
4
2
1
1
1

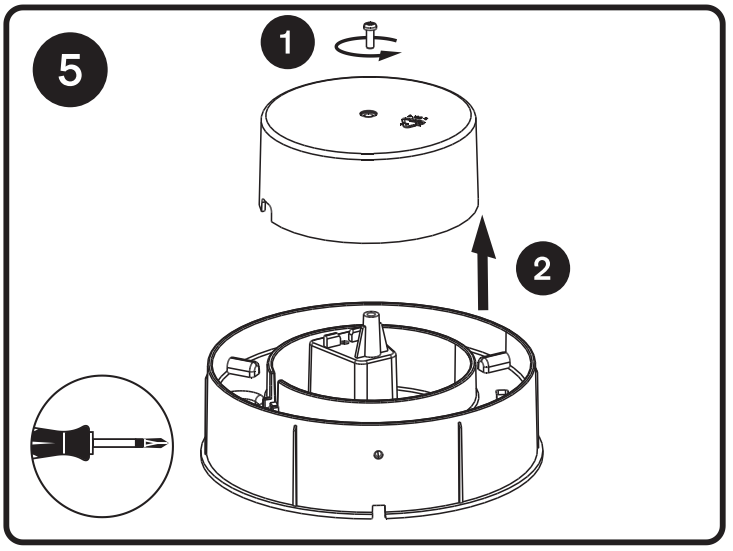
5
1
2

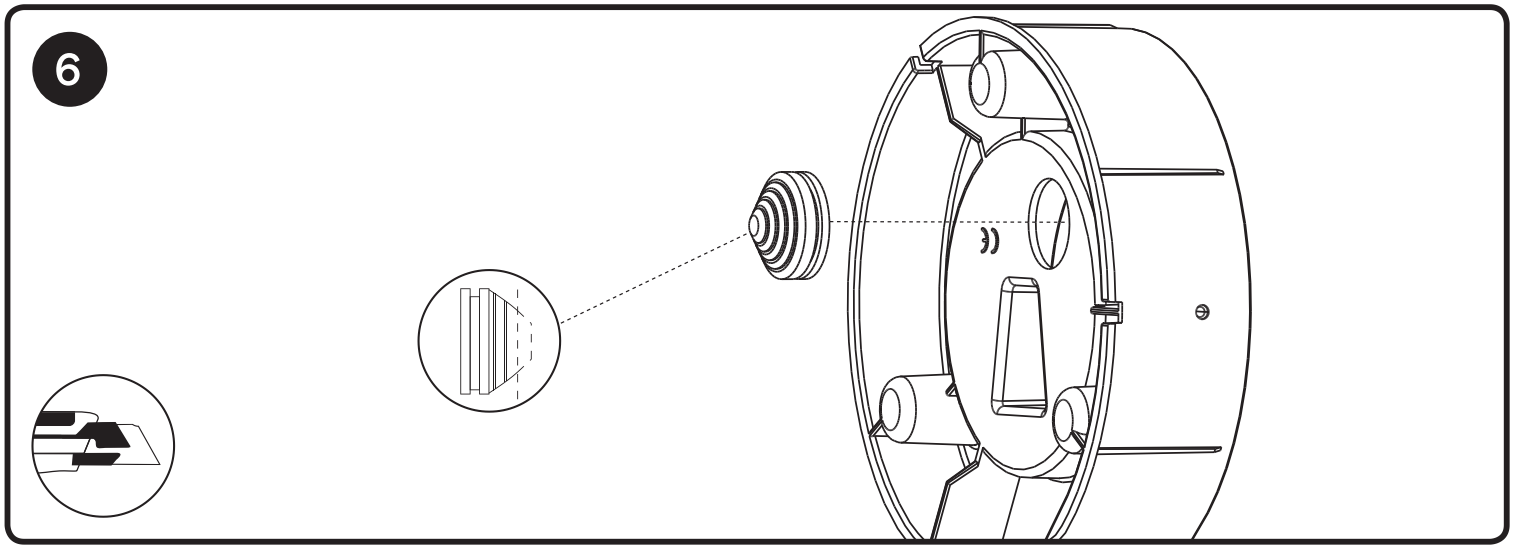
6

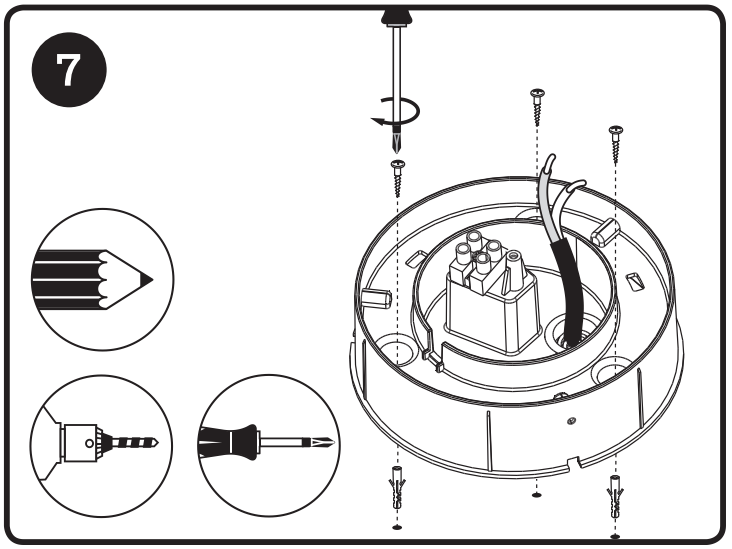
7

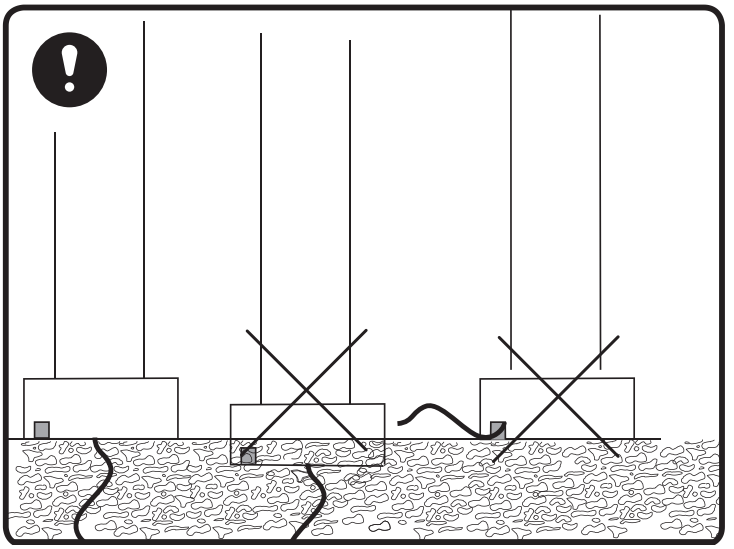

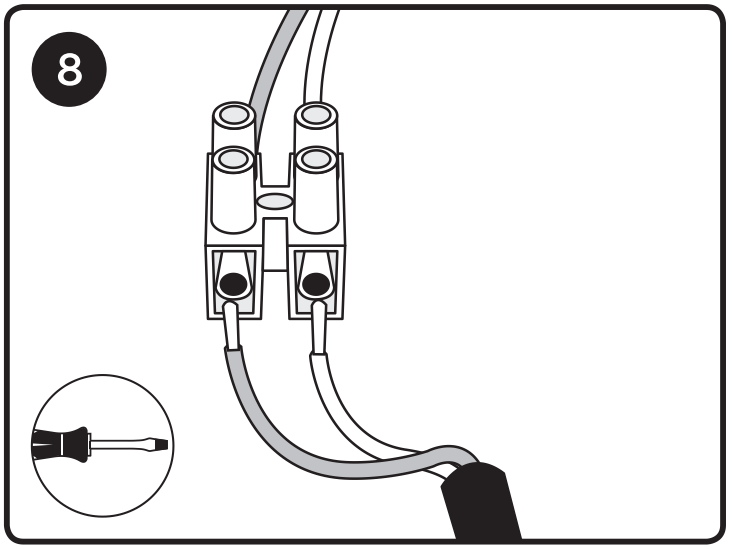
8

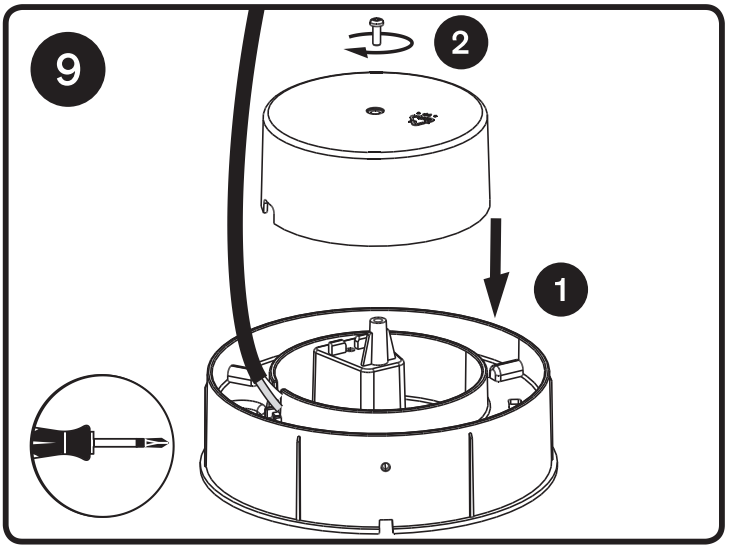
9
2
1

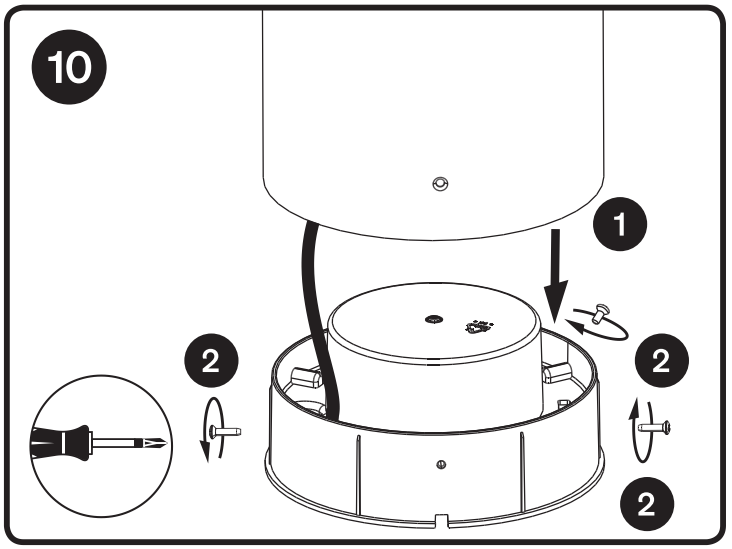
10
1
2
2
2

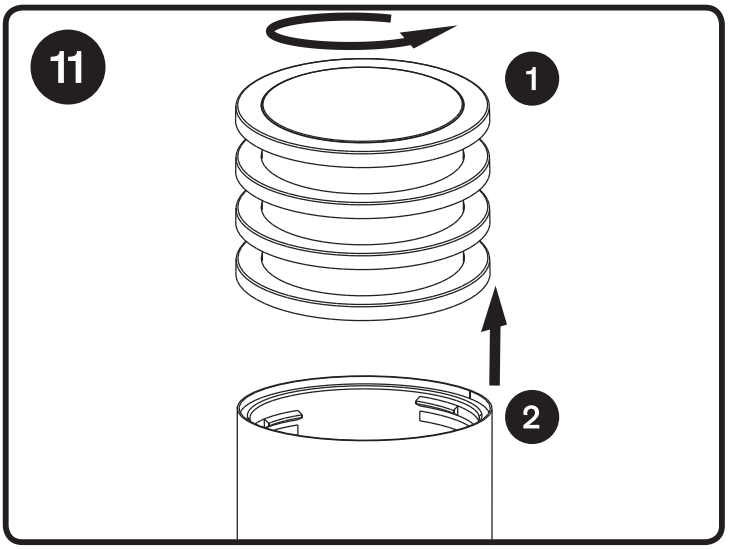
11
1
2

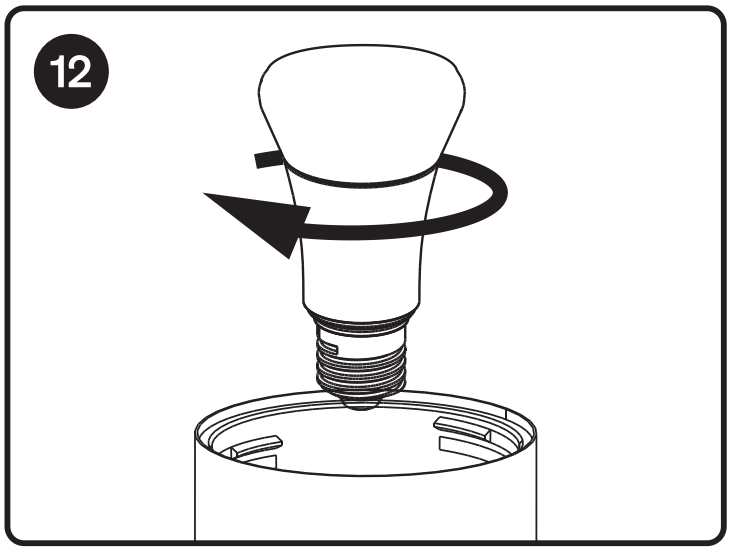
12

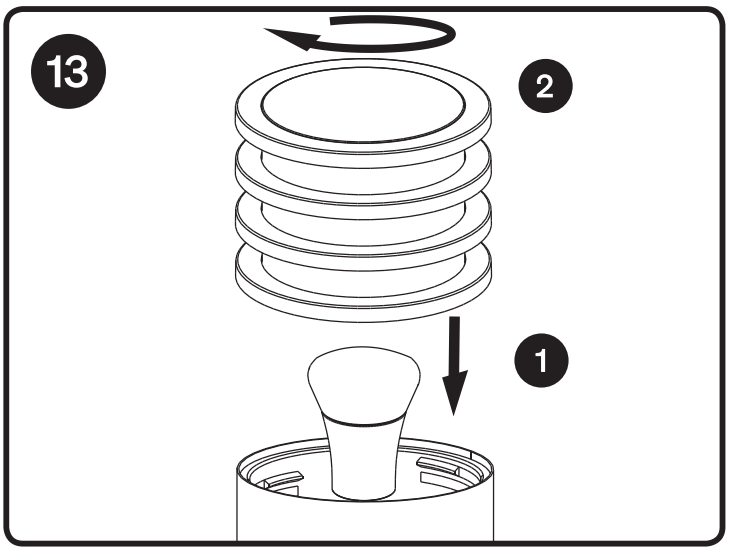
13
2
1

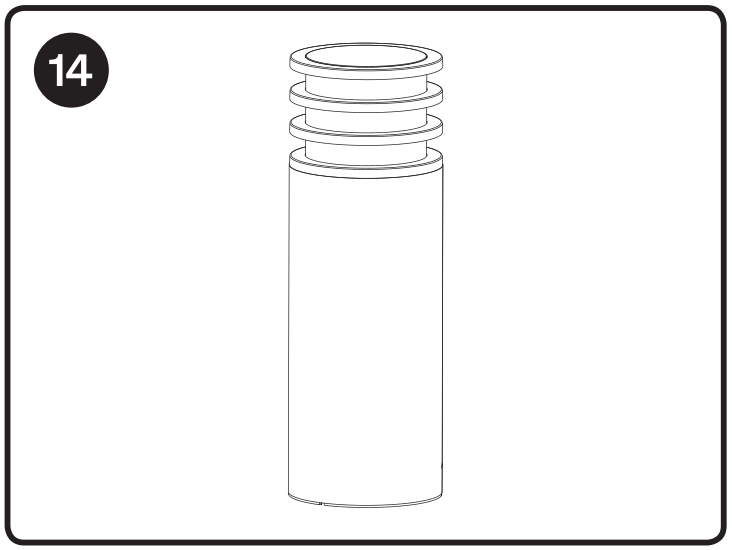
14

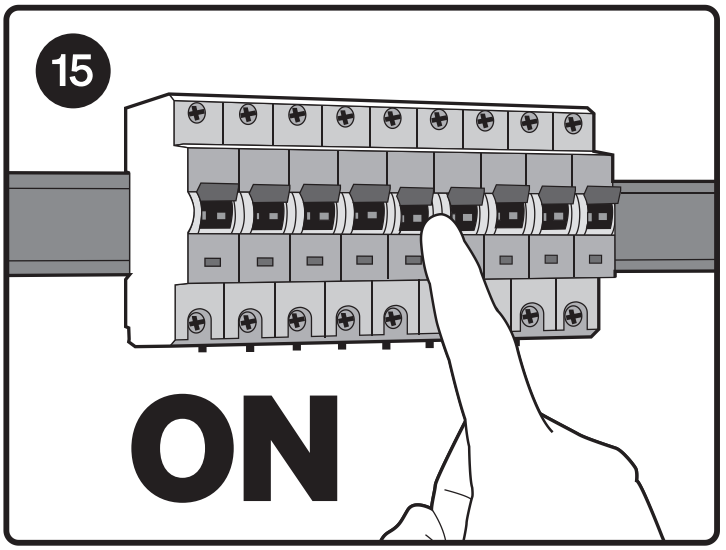
15
ON

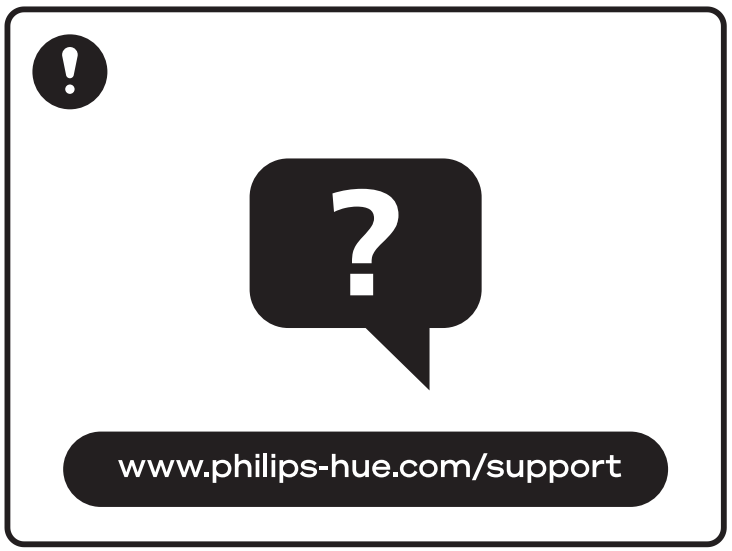
?
www.philips-hue.com/support

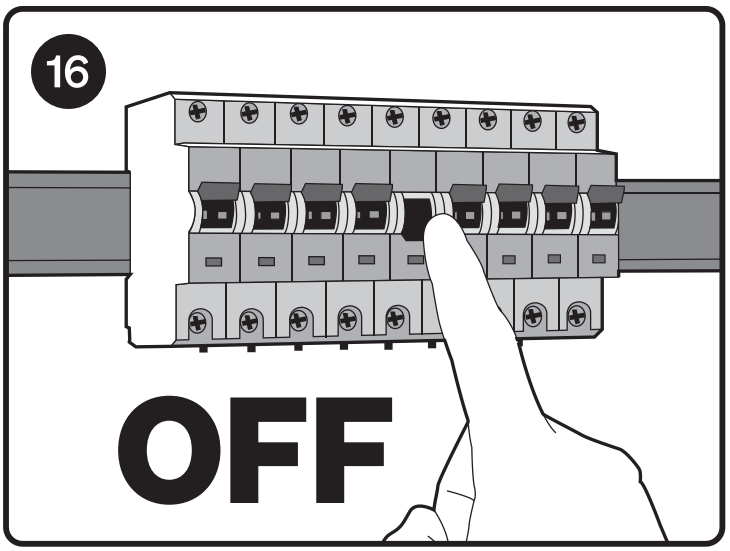
16
OFF

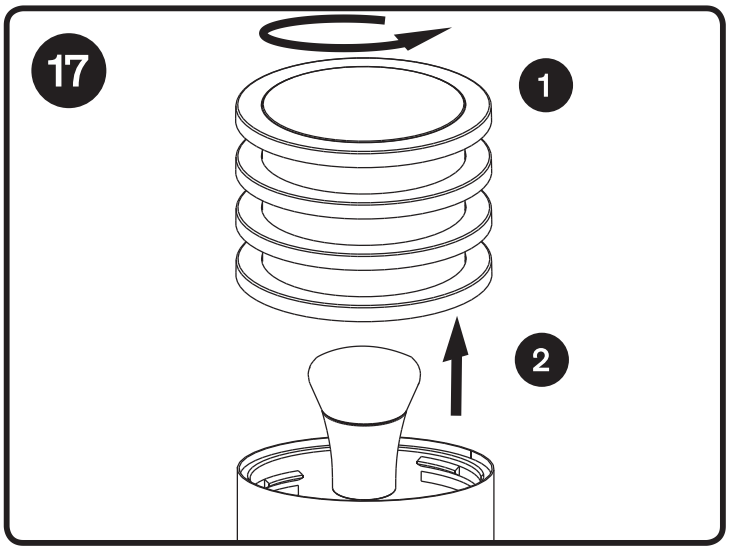
17
1
2

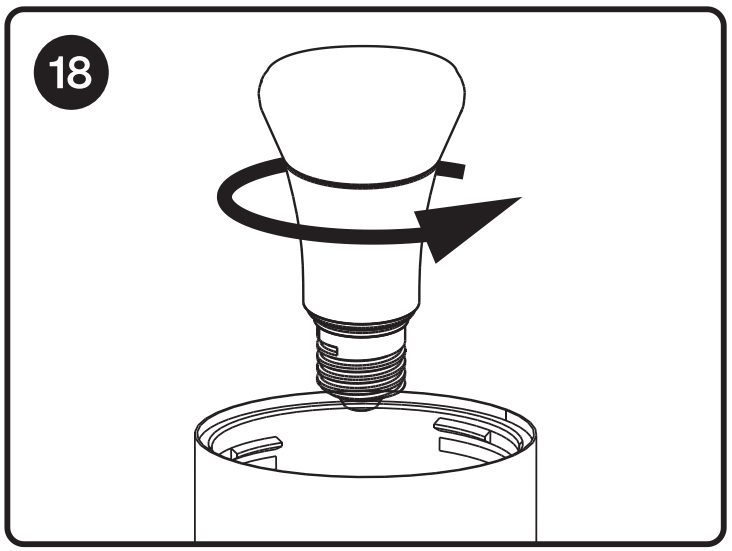
18

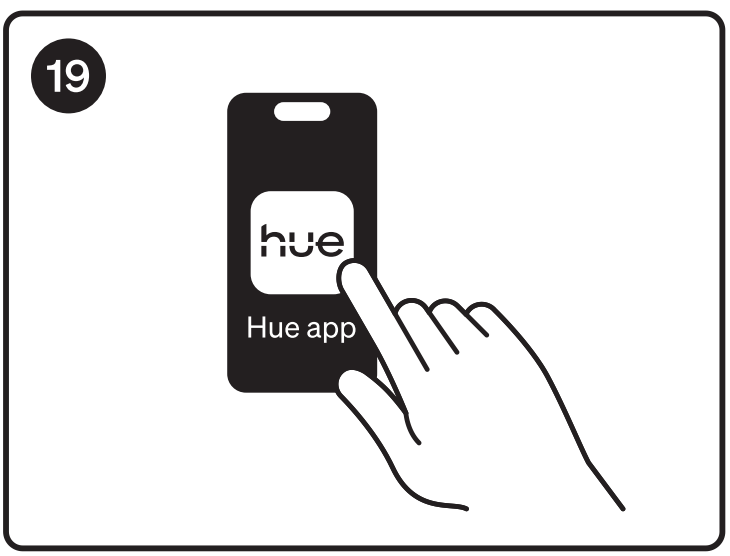
19
hue
Hue app

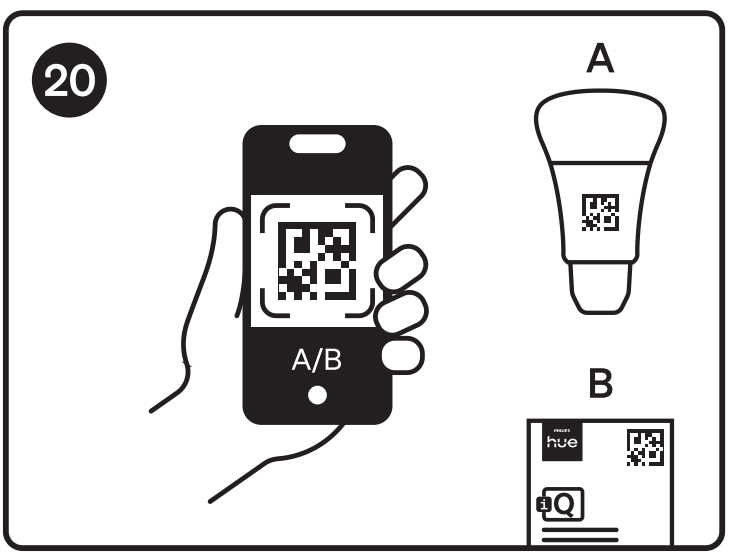
20
A/B
A
B

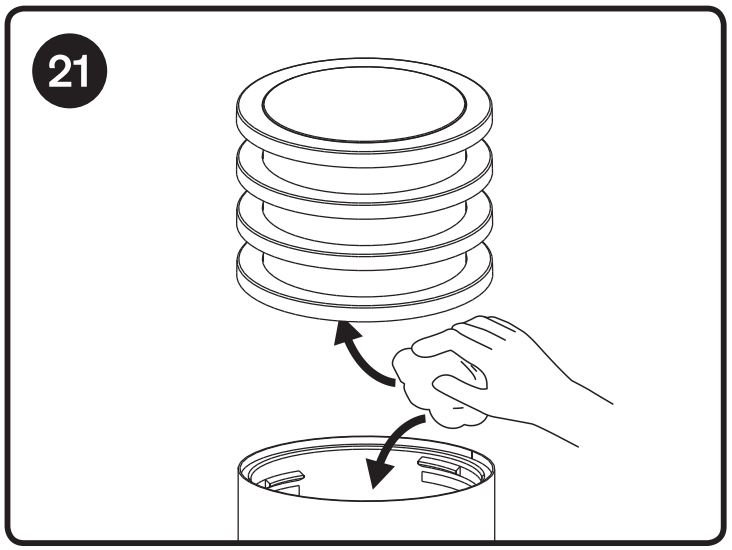
21

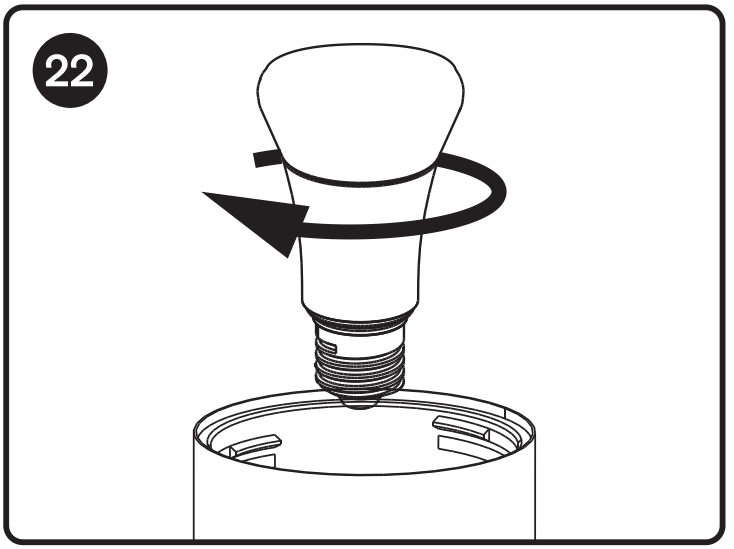
22

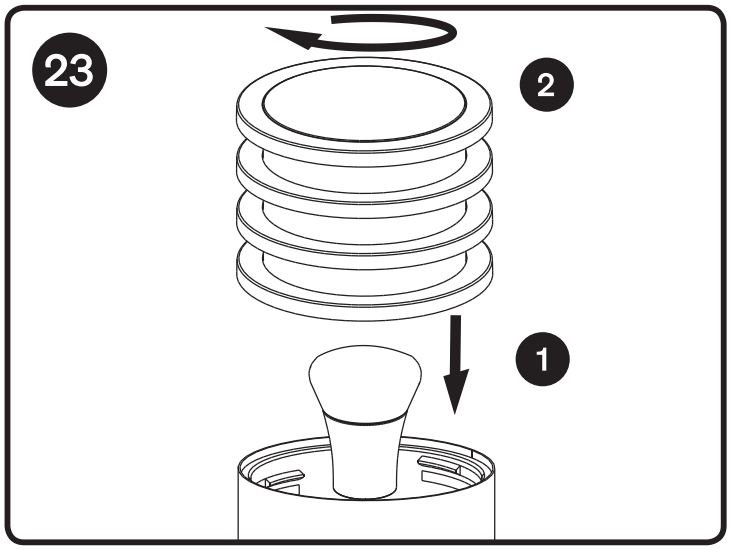
23
2
1

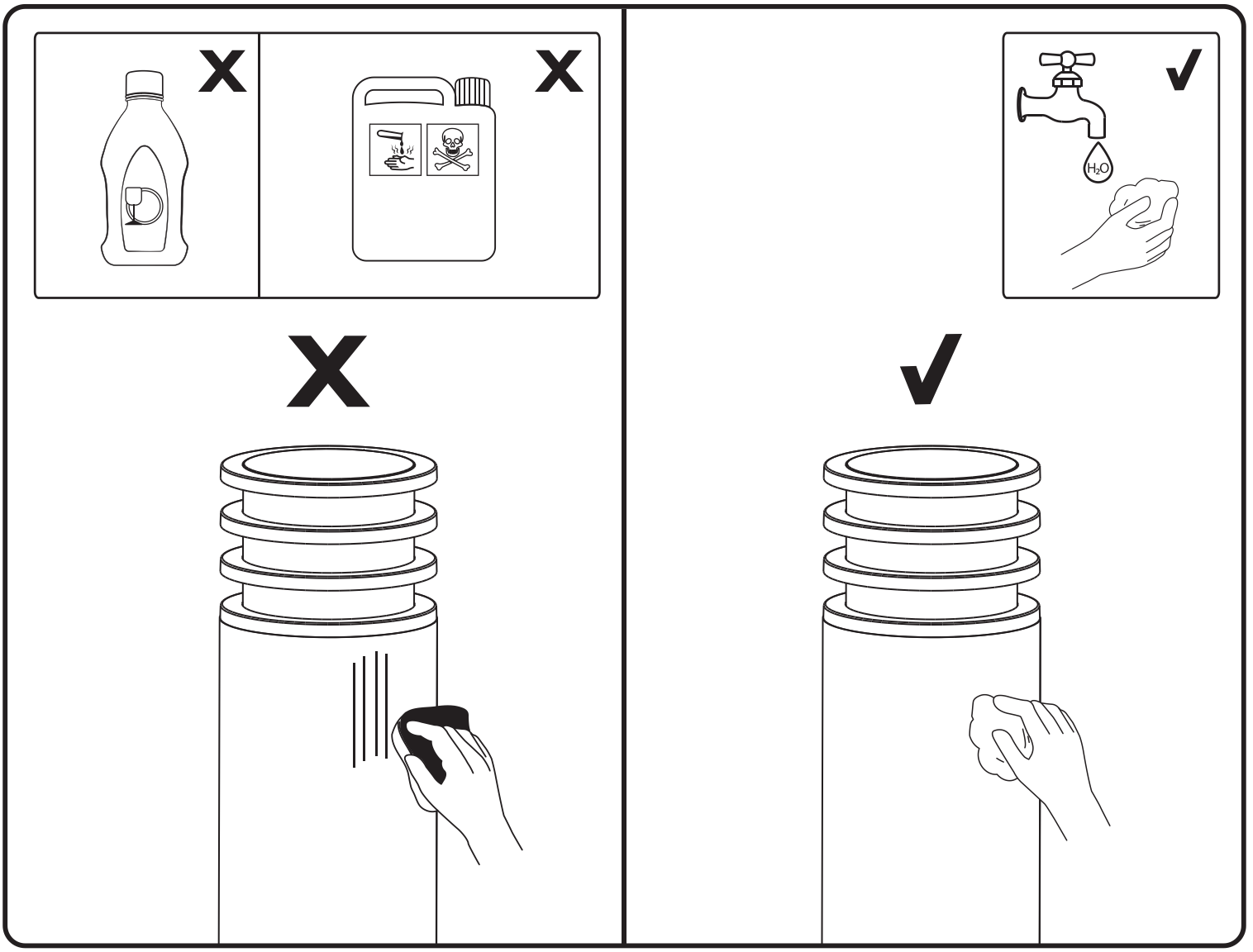
X
X
X
✓
✓
H_2O

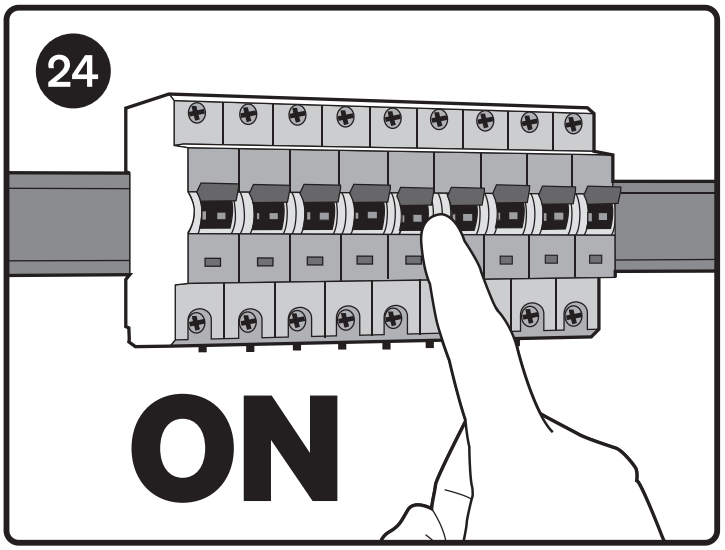
24
ON

hue

Signify
I.B.R.S. / C.C.R.I. Numéro 10461
5600 VB Eindhoven,
the Netherlands
00800-74454775

© 2025 Signify Holding
All rights reserved

Last update: 10/2025

www.philips-hue.com

442280046481